GLOBE THEATRE

VENUE BROCHURE

THE GLOBE THEATRE | 740 SOUTH BROADWAY LOS ANGELES CA 90014

GLOBE THEATRE | HISTORY

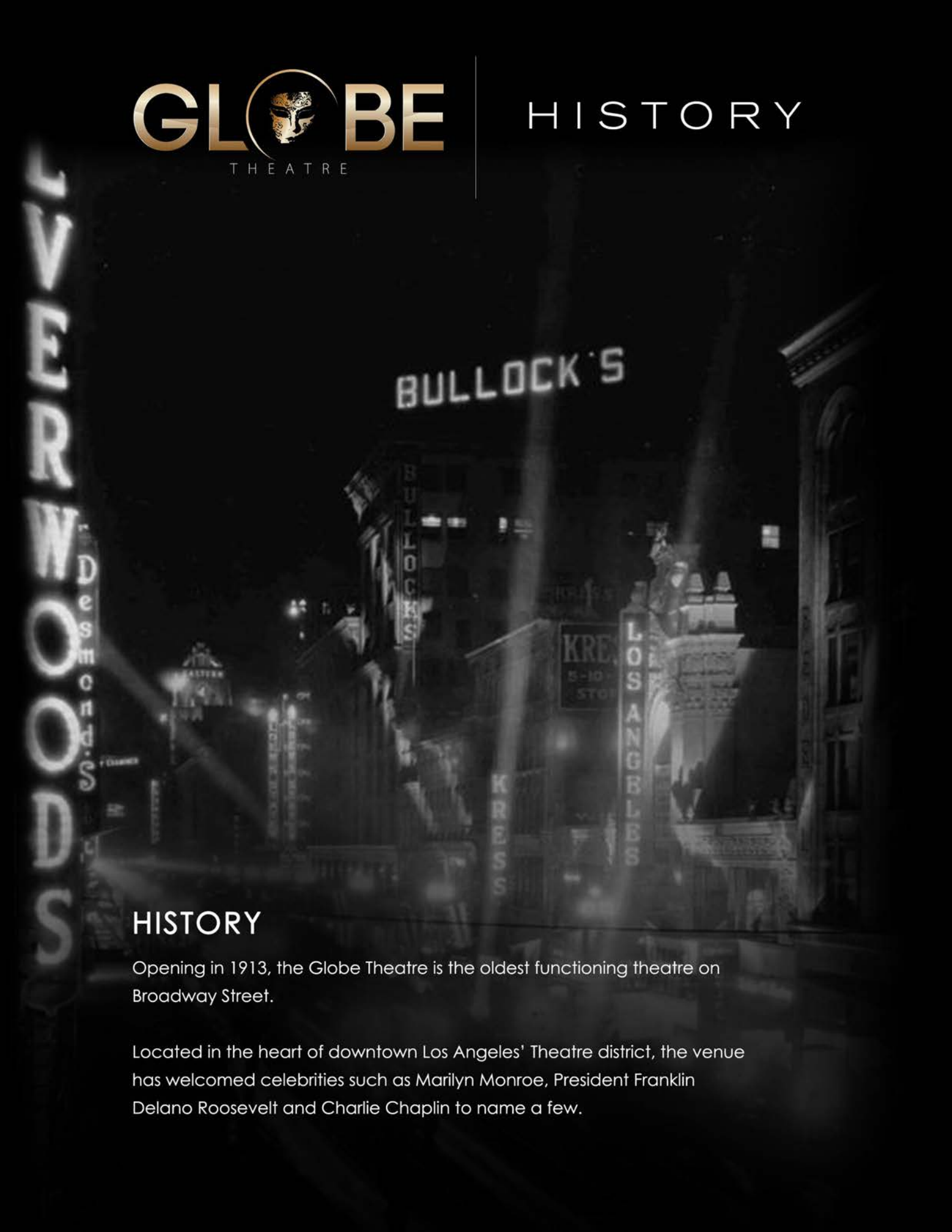

HISTORY

Opening in 1913, the Globe Theatre is the oldest functioning theatre on Broadway Street.

Located in the heart of downtown Los Angeles' Theatre district, the venue has welcomed celebrities such as Marilyn Monroe, President Franklin Delano Roosevelt and Charlie Chaplin to name a few.

GLOBE THEATRE

ABOUT US

ABOUT US

After a meticulous five-year restoration,the Globe Theatre features:

- Over 27.000 Square feet of unique spaces with capacities from 100 to 1900 guests
- World-class sound, lighting and video screens
- Private greenrooms, restrooms, vip lounges and historic opera boxes
- Hi speed internet wired throughout the venue
- Vintage customizable marquee on broadway street for maximum visibility
- Full-service performance venue offering catering, production and audio-visual services
- Ideal for corporate events, social events, film premieres, weddings, concerts and conferences
- ADA compliant

GLOBE THEATRE | SOUND

SOUND

The Globe Theatre is the first performance venue in Southern California equipped with the world-famous Void Acoustic sound system:

PA & DJ MONITORS

- (2) NEXUS 6
- (6) NEXUS STASYS X-AIR SUB BASS
- (2) AIRTEN REAR FILL
- (2) AIR TEN DJ MONITORS
- (2) VENUE 215 SUB BASS DJ MONITORS
- (5) VOID STASYS-2 FLOOR WEDGES

AMPLIFICATION

- (2) BIAS V9
- (4) BIAS V3
- (4) BIAS VQ

OTHER EQUIPMENT

- (1) ALLEN & HEALTH QU-32
- (2) DJM 900NXS2
- (5) CDJ 2000NXS2
- (2) PIONEER PLX1000
- (1) RANE SL4
- (1) SHURE SM57
- (2) SHURE BETA 58A
- (2) SHURE WIRELESS PG58
- (1) 7 PIECE DRUM MIC KIT

GLOBE THEATRE | LIGHTING

LIGHTING

The Globe Theatre boasts the following light fixtures:

- (16) GTD LIGHTING 330II BEAM FIXTURES
- (15) MARTIN ATOMIC 3000 DMX
- (13) DUAL BLINDER LED 100W
- (2) FLOOR AMERICAN DJ STAGE FOG MACHINE
- (17) GTD L-345 – RGB LED PARS
- (2) CHROMA Q COLOR FORCE 12
- (5) GTD-330 BSW HYBRID
- (20) ELATION 6 BAR 1000
- (6) ELATION 6 BAR 500
- (10) PINSPOTS (FOR DÉCOR HIGHLIGHTING)
- (2) ETC 19° LEKO (FOR GOBO PROJECTION)
- (1) NON DMX REEL EFX DF-50 HAZER

GLOBE THEATRE | VIDEO WALL

VIDEO WALL

The Globe Theatre features a 3.9 mm ultra-high resolution video wall that presents video and presentation with incredible color and clarity:

- 114 PANELS
- RESOLUTON: 3.9PH
- MAIN WALL: 10' X 20'
- RESOLUME ARENA 5
- VD WALL PROCESSOR

GLOBE THEATRE

SPECIAL EFFECTS

SPECIAL EFFECTS

The Globe Theatre also features the following special effects:

- (6) 6-WATT LASER
- (14) DMX CRYO JET
- (1) CONFETTI CANNON
- (4) STREAMER CANNONS
- (3) BUBBLE MACHINES
- (3) RIGGING POINTS ABOVE MAIN FLOOR FOR AERIAL ACTS

GLOBE THEATRE | BASEMENT UNDERGROUND

THE BASEMENT UNDERGROUND

In addition to its main room, the Globe Theatre boasts a truly unique raw event space: The Underground. Located beneath the venue, the room provides guests an authentic underground experience, true to its name. The Underground can fit up to 450 guests and comes with full Void Acoustics Sound and intelligent lighting.

- (2) VOID AIR-MOTION
- (2) VOID STASYS X-AIR
- (2) VOID STASY 2 DJ MONITORS

GLOBE THEATRE

BLUEPRINTS

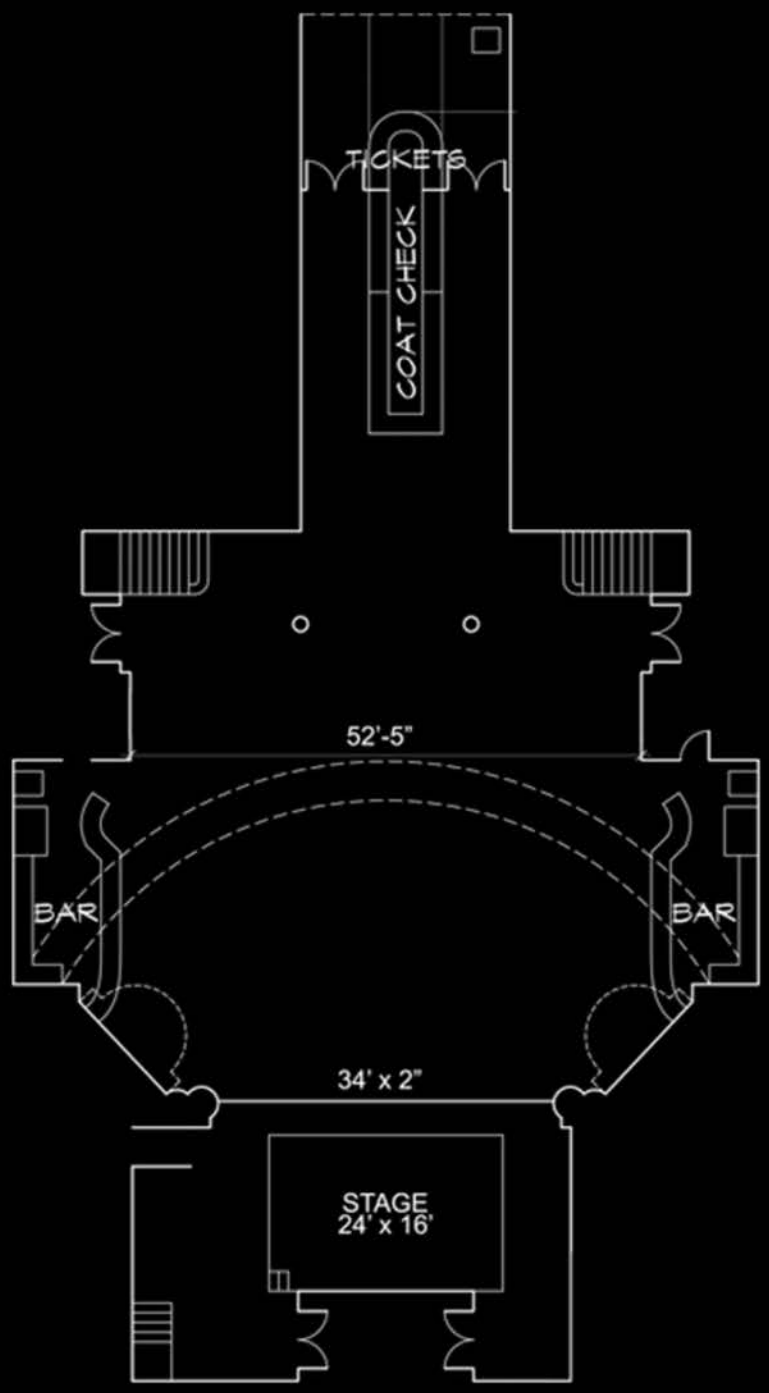

MAIN FLOOR

- 1,300 STANDING CAPACITY
- 450 SEATED THEATRE-STYLE
- 320 SEATED BANQUET-STYLE
- MODULAR STAGE
- AIR CONDITIONING
- WIFI THROUGHOUT
- PRIVATE DRESSING ROOMS
- COLD KITCHEN PREP SPACE
- TWO (2) ADA COMPLIANT RESTROOMS

GLOBE THEATRE | BLUEPRINTS

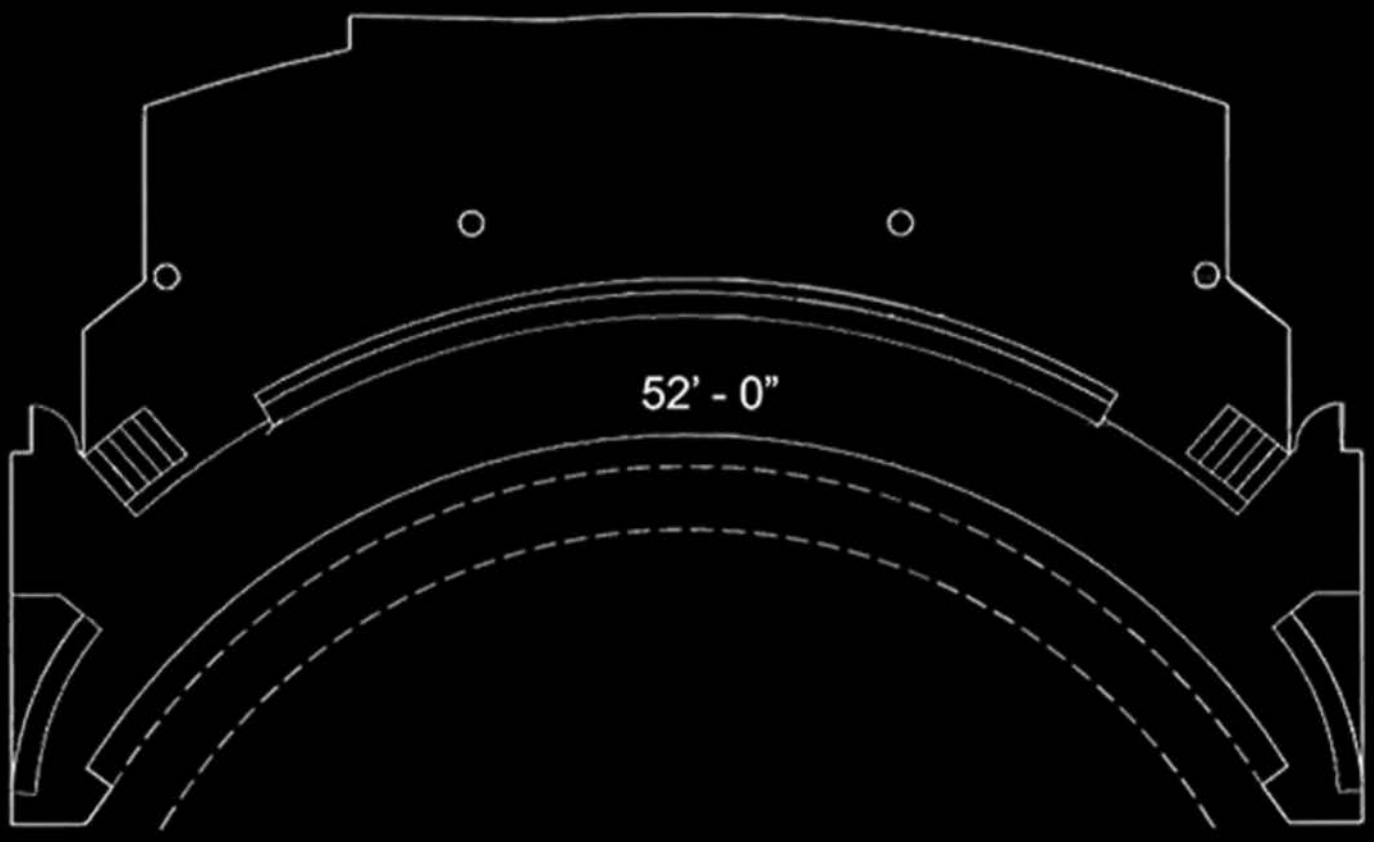

MEZZANINE

- 300 STANDING CAPACITY
- PRIVATE PORTABLE BARS
- MODULAR LOUNGE FURNITURE
- SEPARATE WIFI NETWORK
- ABILITY TO OPERATE FOH FROM MEZZANINE OR ON MAIN FLOOR

GLOBE THEATRE | BLUEPRINTS

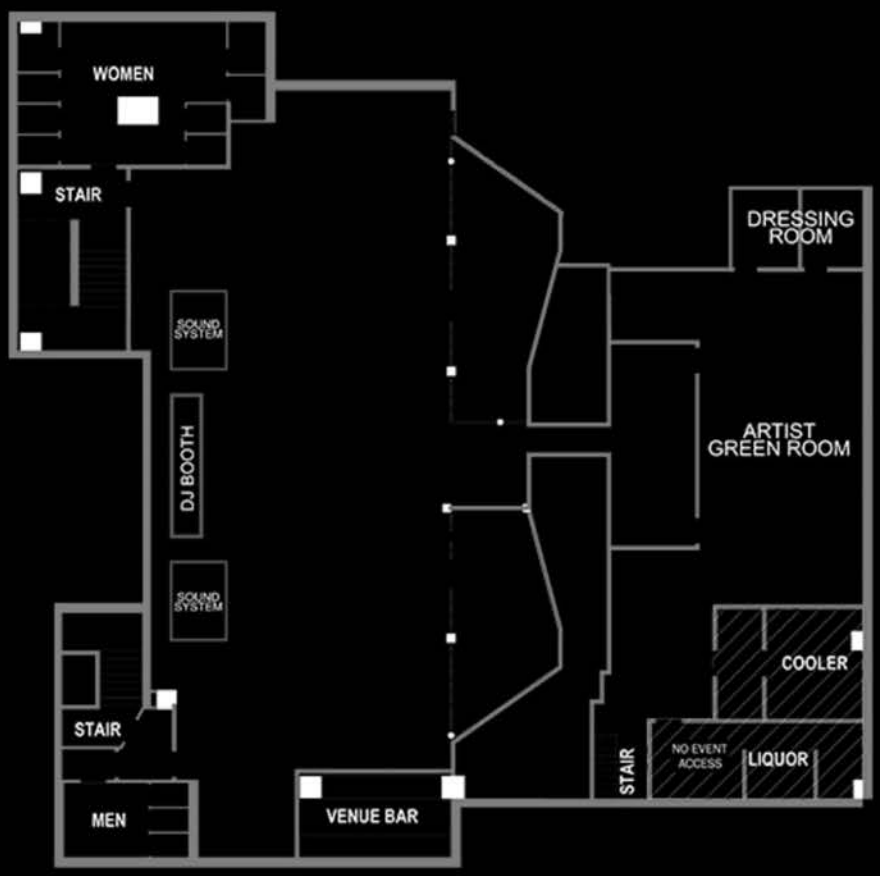

BASEMENT

- 450 STANDING CAPACITY
- ADJACENT TO PRIVATE GREEN ROOM
- SEPARATE WIFI NETWORK
- MULTIPLE BARS
- VOID ACOUSTICS SOUND SYSTEM
- AUTHENTIC UNDERGROUND FEEL
- USEFULFOR CREW FEEDS, CATERING AND ADDITIONAL DRESSING ROOM

GLOBE THEATRE

PAST CLIENTS

airbnb

ESL

FABLETICS

sage

SAMSUNG

WARNER BROS. PICTURES

NETFLIX

Spotify®

pepsi

Red Bull®

Ucla

MedMen

tongal®

CONTACT

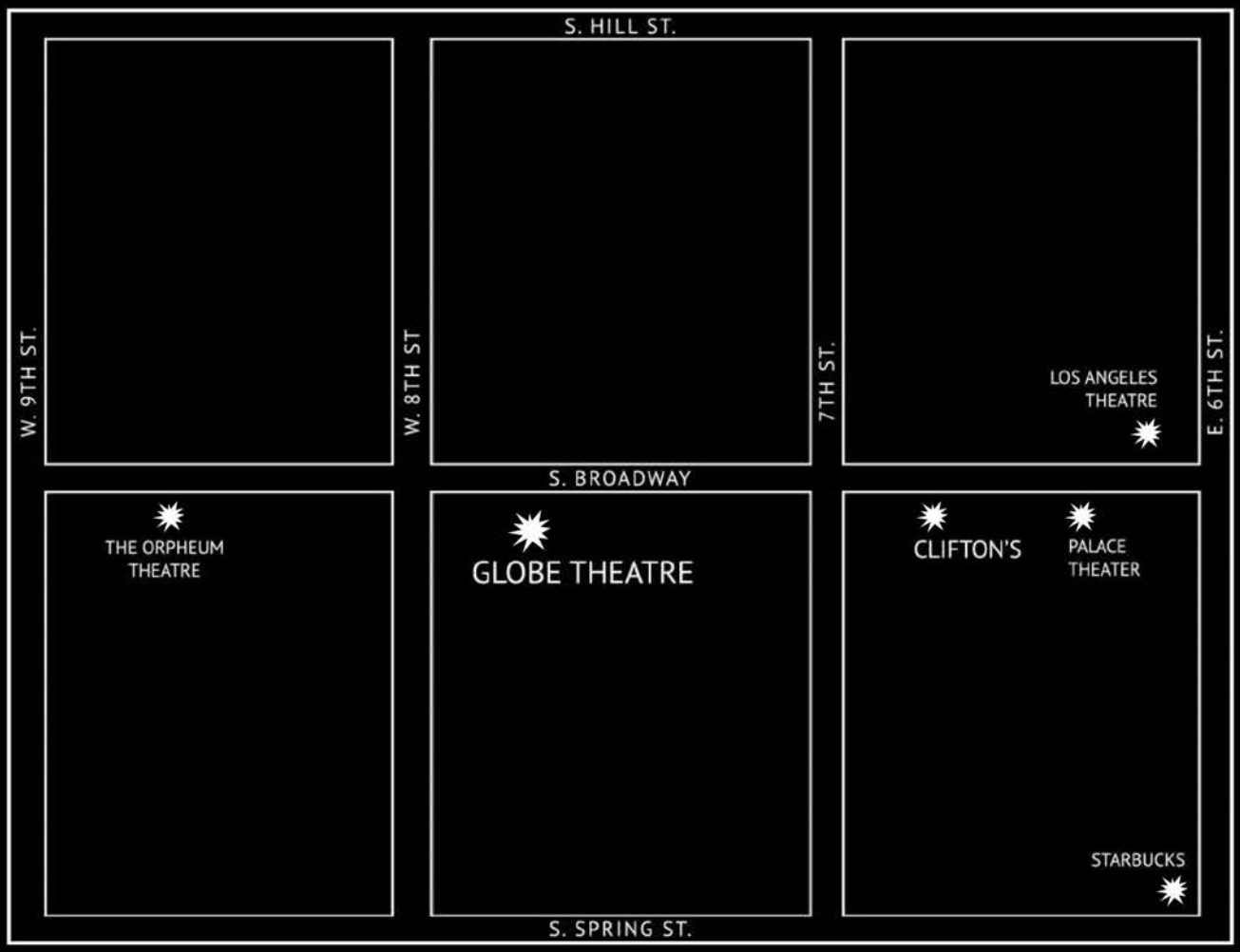

PRESTON GASPAR

DIRECTOR OF SPECIAL EVENTS

E: PRESTON@GLOBETHEATRE-LA.COM

P: 323.9096226

GLOBE THEATRE

740 S. BROADWAY STREET

LOS ANGELES, CA 90014

GLOBE THEATRE-LA.COM